Installation Manual

FMS winderGLIDE Type BKS.D.3

Actuator for unwind and rewind stations

Document Version 1.10 12/2023 NS

This operation manual is also available in German.
Please contact your local representative.

Table of Contents

1 Safety Instructions

1.1 Description Conditions

a) High danger of health injury or loss of life

Danger

This symbol refers to high risk for persons to get health injury or loss of life. It has to be followed strictly.

b) Risk of damage of machines

Caution

This symbol refers to information, that, if ignored, could cause heavy mechanical damage. This warning has to be followed absolutely.

c) Note for proper function

Note

This symbol refers to an important information about proper use. If not followed, malfunction can be the result.

1.2 List of Safety Instructions

The winderGLIDE BKS.D.3 may not be stressed over the specification limits neither during assembly nor operation. In particular it may not be operated outside the specified temperature range and protection class.

The attachment points for the winderGLIDE on the machine must be properly designed

For correct installation and operation, follow the electrical wiring diagram and instructions in this manual.

2 Product Data

2.1 Mechanical Dimensions

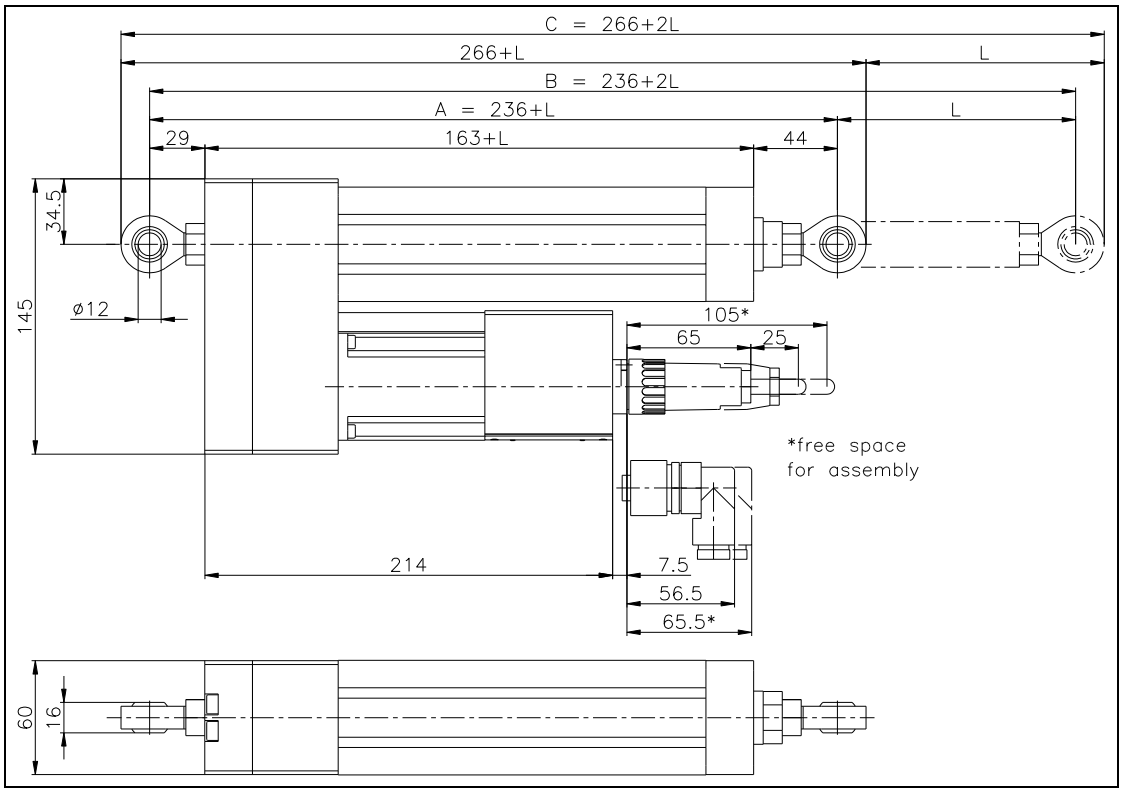

Fig. 1: Outline Drawing BKS.D.3.0004e

Dimensions (see Fig. 1)	**in mm and [in]**
Steering offset L	125 [4.92] or 200 [7.87]
Bracket distance A in center position of toggle link sockets	236 [9.29] + L
Total length B at full travel positions	236 [9.29] + 2L
Total length C	266 [9.29] + L
Screw pitch	5 [0.2]

2.2 Order Code (Example) winderGLIDE Type D.3

BKS.D.3. 125

Series

Steering offset

2.3 Scope of Delivery

Actuator with spherical rod ends on both sides
Not included in the scope of delivery are the preassembled cable and alternative mounting devices. Additional mounting devices like clevis, hinge or flange for front mounting can be ordered separately.

3 Installation

3.1 Assembly Conditions

The winderGLIDE BKS.D.3 is defined as “partly completed machinery” according to the **Directives 2006/42/EC, article 2**. In order to assure a proper functionality of the parts and guarantee the essential health and safety requirements of operators working with it, the following conditions for the assembly of the winderGLIDE must be met:

Caution

The winderGLIDE BKS.D.3 may not be stressed over the specification limits neither during assembly nor operation. In particular it may not be operated outside the specified temperature range and protection class.

Caution

The attachment points for the winderGLIDE on the machine must be properly designed.

Caution

For correct installation and operation, follow the electrical wiring diagram and instructions in this manual (ref to Fig. 3 “Pin Assignment”) .

3.2 Mounting the winderGLIDE Type D.3

There are four mounting devices to assemble the winderGLIDE on the machine frame These mounting devices can be combined according to the table below to meet the requirements of the application (see also Fig.2).

Mounting devices	Joint at the static end	Joint at the moving end
Spherical rod end	●	●
Clevis	●	●
Hinge	●	-
Flange	●	-

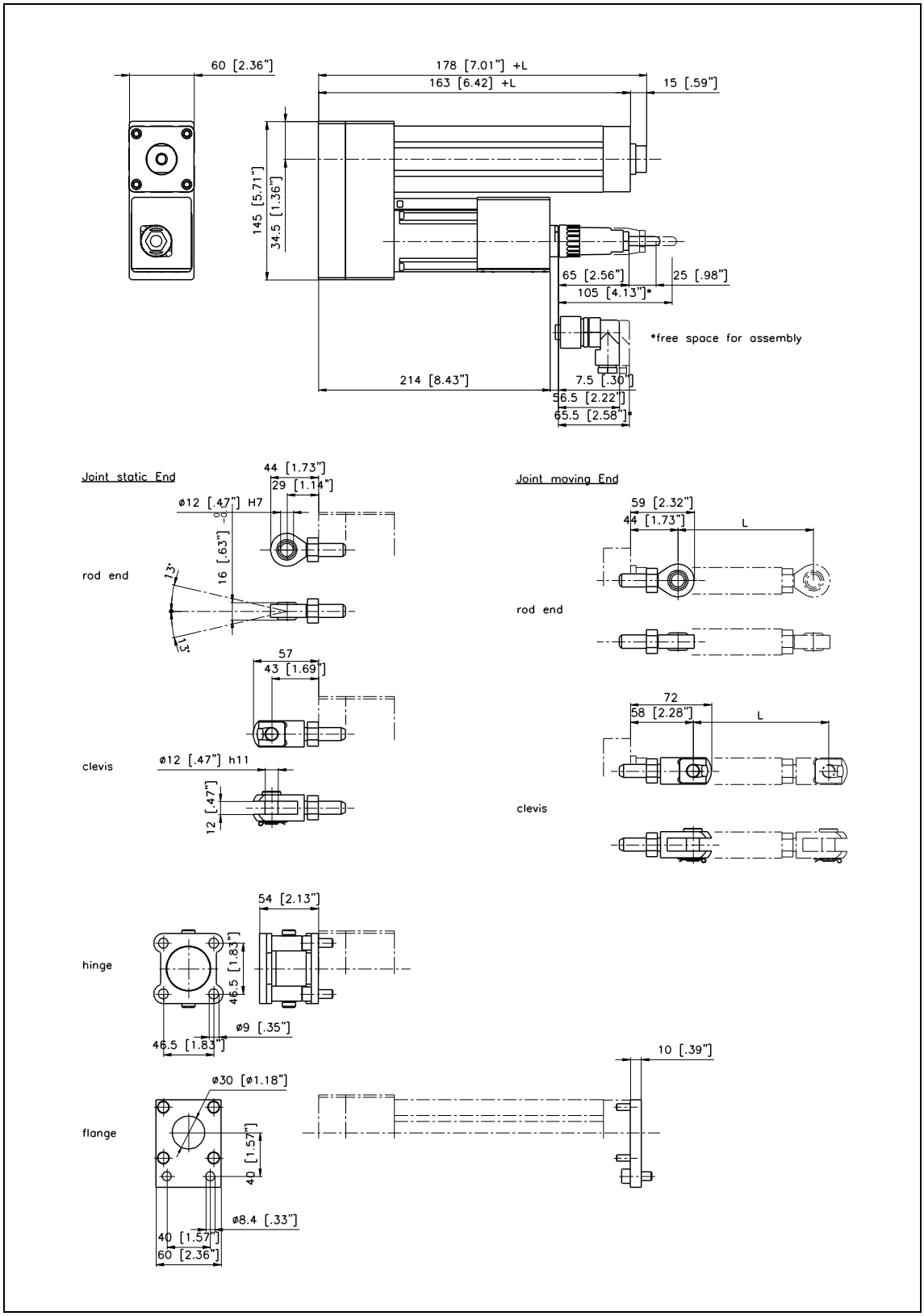

Fig. 2: Mounting Devices of BKS.D.3 BKS.D.3.0005us

> ⚠ ***Caution***
> ***When tightening the rod end, you must secure the push rod against twisting using a hexagon wrench, otherwise the thread of the push rod may be damaged!***

The static part of the winderGLIDE must be mounted to the machine frame e.g by means of the spherical rod end on the gearbox or the flange at the end of the spindle housing. The moving rod end is mounted to the winding stand. The BKS.D.3 was designed for horizontal mounting positions.

3.1 Installation on unwinding station

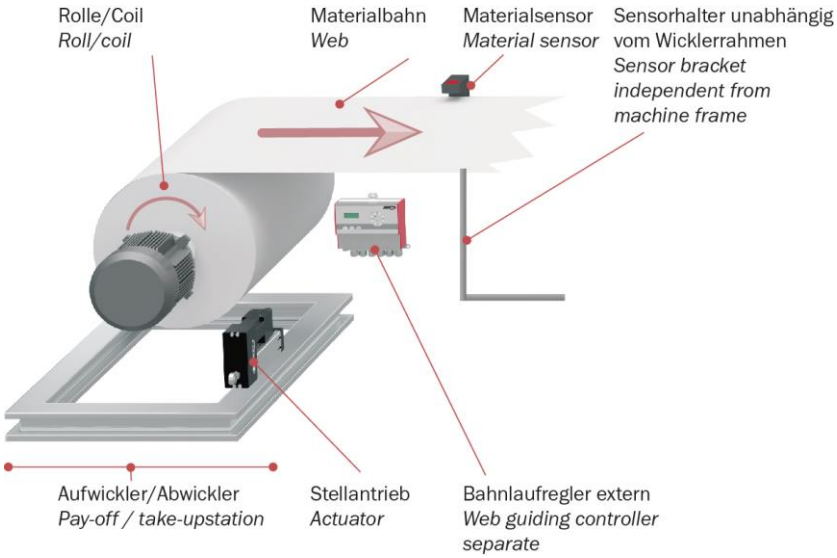

Tension_Control_Web_Guiding_Scheme_Schema.ai

3.2 Installation on winding station

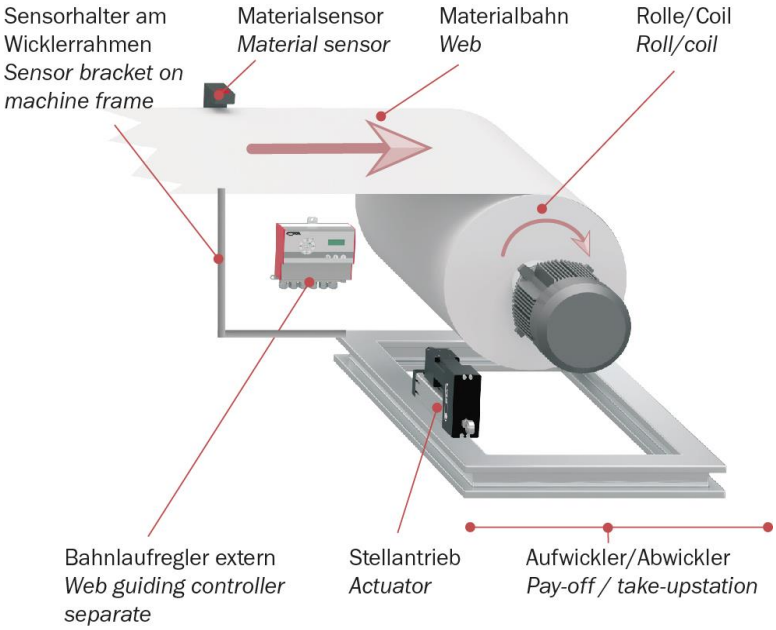

Tension_Control_Web_Guiding_Scheme_Schema.ai

3.3 Pin Assignment

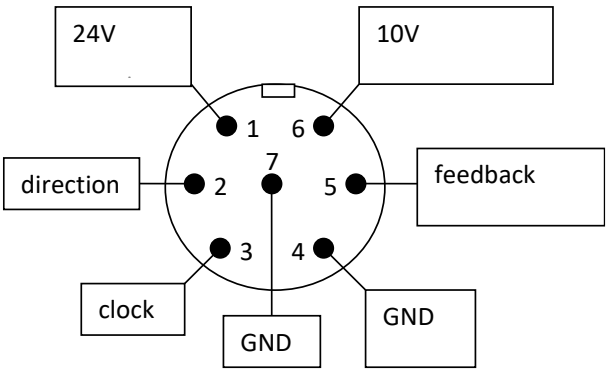

Fig. 3: Wiring diagram winderGLIDE BKS.D.3

4 Functional Description

The FMS-winderGLIDE D.3 is a dedicated actuator for the use in unwind and rewind stations.
The stepper motor equipped drive is powerful and simple in its application. The used technology is clean. Specially when used in the food and pharmaceutical packaging industry the FMS-winderGLIDE D.3 has huge advantages compared to hydraulic drives. The FMS-winderGLIDE is designed around an accurate spindle and ball screw which makes the devise very precise. The easily accessible connector and its pace-saving design make the FMS-actuator very suitable for upgrading existing installations.

5 Technical Specification

Parameter	Specification
Spindle Pitch	5
Thrust Force [N]	650
Adjusting Speed [mm/s]	25
Drive	16mm spindle, ball screw combination
Temperature Range	-10 … 60 °C (14…140 °F)
Protection Class	IP40

FMS Force Measuring Systems AG
Aspstrasse 6
8154 Oberglatt (Switzerland)
Tel. +41 44 852 80 80
Fax +41 44 850 60 06
info@fms-technology.com
www.fms-technology.com

FMS Italy
Via Baranzate 67
I-20026 Novate Milanese
Tel: +39 02 39487035
Fax: +39 02 39487035
fmsit@fms-technology.com

FMS USA, Inc.
2155 Stonington Ave. Suite 119
Hoffman Estates, IL 60169 USA
Tel. +1 847 519 4400
Fax +1 847 519 4401
fmsusa@fms-technology.com

FMS UK
Highfield, Atch Lench Road
Church Lench
Evesham WR11 4UG, Great Britain
Tel. +44 1386 871023
Fax +44 1386 871021
fmsuk@fms-technology.com